EcoCAM

Exploded view with Parts List

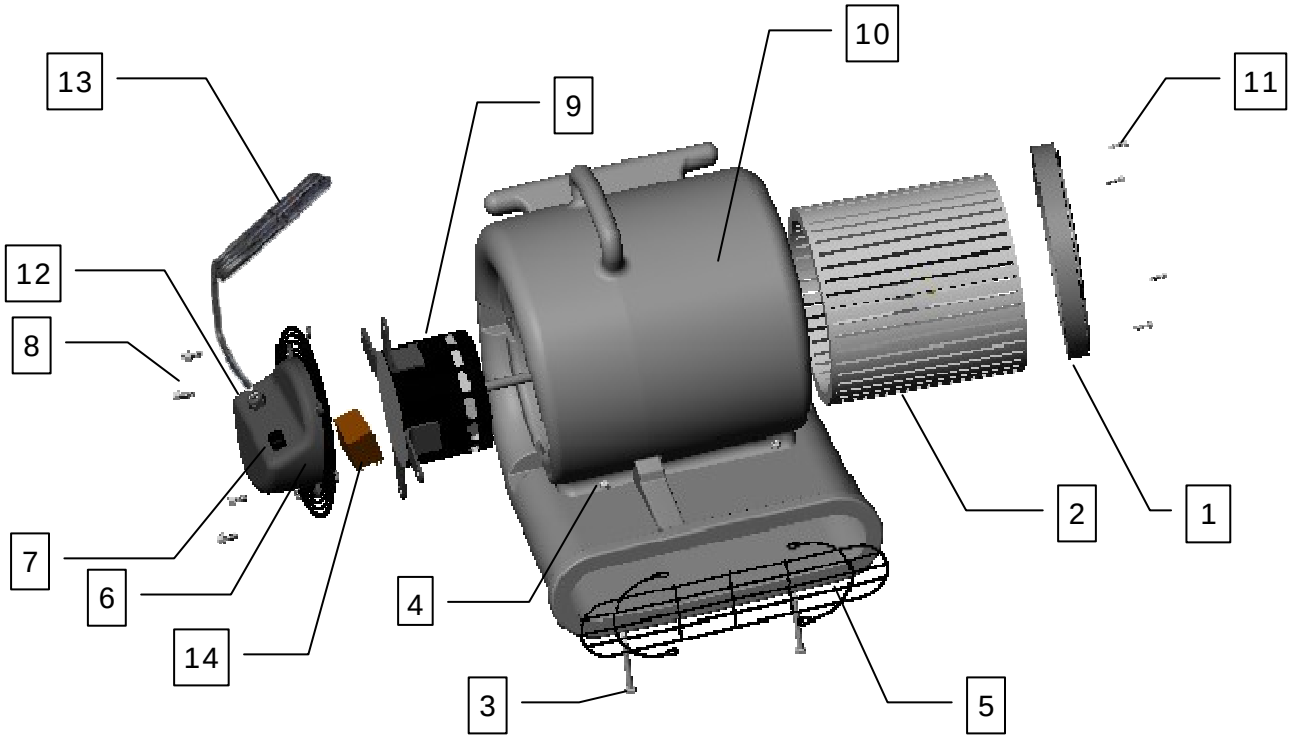

Item	Description	Qty Req.	Viking Part#	Item	Description	Qty Req.	Viking Part#
1	Guard,Fan Side	1	A956A	**8**	Flange Bolt, 1/4-20x3/4	1	1/4-20x3/4FLG
2	Blower Wheel, SM Metal	1	H323CC	**9**	Motor, 1/3 HP 115V 1.9 amp	1	AB0330019SM
3	Bolt, 1/4-20x3 ½ SS	2	1/4-20X3 1/2 HCS SS	**10**	Housing,SM Grey Granite	1	SM GGR
4	1/4-20 Acorn Nut SS	1	1/4-20 Acorn SS	**11**	Screw, 8-15x3/4	1	8-15x3/4
5	Front, Guard	2	H339	**12**	Strain Relief, comes with A955AB	1	H220
6	Guard, Black Cord	1	A955AB	**13**	Cords,16/3 SJT Black, 25'	1	Black Power Cords
7	Switch, rocker	1	E545	**14**	Capacitor, Start	1	E500SM